| PROJECT NAME | DEMAND NUMBER | BUSINESS DEPTT. | APPLICATION DEPTT. | BRD APPROVED? | PROJECT MANAGER | SOLUTION TYPE |
|---|---|---|---|---|---|---|
| Enterprise Project Management Platform(EPMP) | SCP25260824165280 | DE-GOV1 | DE-GOV1 | Yes | Aman Kumar Jha | NEW |
| **SOLUTION DESIGN DOCUMENT NAME** | **DOC VERSION** | **REQUEST DATE** | **REVIEW STAGE** | **TYPE CLASSIFICATION** | **APP. SUPPORT DEPTT.** | **APPLICATION NAME** |
| EPMP Solution Architecture | 1.0 | 25-03-2026 | DESIGN | A | GOV1 | Enterprise Project Management Platform(EPMP) |

## BUSINESS REQUIREMENTS
*(Document the business requirements & use cases being delivered as a part of this change)*

Design the following as a part of EPMP:
- Ideation Management
- End-to-End Project & Program Management
- Execution Management
  - Risk Management
  - Decision & Approval Record (DAR) Management
  - Action Management
  - Dependency management
- Resource Management
- Startup & Innovation Management
- Governance, Compliance & Auditability
- Reporting & Analytics

## BUSINESS VALUES
*(Document the return on investments, explain how the investments will align with overall MSIL Corporate Vision & Goal)*

Essential Project with the following set of qualitative values:
- Improved Governance & Transparency
- Faster Ideation-to-Execution Cycle
- Optimized Resource Utilization
- Enhanced Decision-Making Quality
- Scalability & Future Readiness
- Reduced Operational & Compliance Risk
- Leadership & Portfolio Visibility

ROI Indicators (Indicative):
- Reduction in manual effort for reporting and governance.
- Improved project success rate and schedule adherence.
- Early risk detection reducing downstream cost overruns.
- Faster innovation throughput converting ideas to value.

## USER EXPERIENCE DESIGN
*(Document the mock-up screens/wireframes, if applicable)*

- Include all the mock-up screens & wireframes as per requirement. If it doesn't fit into this space, attach detailed document or use annexure.

**Note:** Use annexure to draw detailed mock-up screens/wireframes if it doesn't fit into this space.

## BUSINESS PROCESS DIAGRAM
*(Document the impacted business processes)*

- Mention the business processes impacted through this change. Draw as-is and to-be business processes. If it doesn't fit into this space, attach detailed document.

**Note:** Use annexure for detailed business process diagrams, if it doesn't fit into this space.

## APPLICATION ARCHITECTURE DIAGRAM
*(Document all the application components, as per applicability)*

- Include the application architecture diagram which illustrates the structure of application, different components of application i.e. the building blocks and how they will interact with each other.
- If it is an enhancement on existing application, please document "As-Is" Diagram and "To-Be" Diagram for easy identification of change.

**Note:** Use annexure for detailed component diagrams, if it doesn't fit into this space.

## INFORMATION ARCHITECTURE DIAGRAM
*(Document the data & integration details, as per applicability)*

- Include the integration architecture diagram which illustrates different interfaces, their flow across the application and details of data objects being exchanged through the integrations. It should contain mode and method of data exchange as well.
- If it is an enhancement on existing application, please document "As-Is" Diagram and "To-Be" Diagram for easy identification of change.

**Note:** Use annexure for detailed information architecture diagram, if it doesn't fit into this space.

## TECHNOLOGY ARCHITECTURE DIAGRAM
*(Document the stack, structure and behavior of technology & infrastructure used, as per applicability)*

- Include the technology & infrastructure architecture diagram which illustrates the structure and behavior of technology & infrastructure used.
- If it is an enhancement on existing application, please document "As-Is" Diagram and "To-Be" Diagram for easy identification of change.

**Note:** Use annexure for detailed technology architecture diagram, if it doesn't fit into this space.

## SECURITY MEASURES & CONTROLS
*(Document the security controls & policies, if applicable)*

- Document the security controls and policies being deployed for the solution. Also include the diagram which depicts how the application components are being secured. For ex – deployment of firewalls, encryption of data at rest, MFA authentication, identity access, authorization etc.

**Note:** Attach detailed Security Policies & Controls or use annexure, if it doesn't fit into this space.

## NON-FUNCTIONAL REQUIREMENTS (NFRs)
*(Document the non-functional requirements, as per applicability)*

- Document the non-functional requirements which describe the system's operation capabilities and constraints. It must include – performance, scalability, security, usability & maintainability dimensions.
- If it is an enhancement on existing application, please document comparison between NFRs of existing application vs target application.

**Note:** Attach detailed NFR Document or use annexure, if it doesn't fit into this space.

| REVIEW REF NO. | EA REVIEW VERSION | DATE OF REVIEW | REVIEWER | EXCEPTION APPROVAL? | APPROVAL STATUS & REMARKS |
|---|---|---|---|---|---|
| <EA1234> | <1.0/1.1/etc> | (DD-MM-YYYY) | RAKESH K PANDEY | (YES/NO) | (APPROVED/REJECTED/PENDING FOR INFO.) |

## BUSINESS REQUIREMENTS

EPMP

| PROJECT NAME | DEMAND NUMBER | BUSINESS DEPTT. | APPLICATION DEPTT. | BRD APPROVED? | PROJECT MANAGER | SOLUTION TYPE |
|---|---|---|---|---|---|---|
| Enterprise Project Management Platform(EPMP) | SCP25260824165280 | DE-GOV1 | DE-GOV1 | Yes | Aman Kumar Jha | NEW |
| **SOLUTION DESIGN DOCUMENT NAME** | **DOC VERSION** | **REQUEST DATE** | **REVIEW STAGE** | **TYPE CLASSIFICATION** | **APP. SUPPORT DEPTT.** | **APPLICATION NAME** |
| EPMP Solution Architecture | 1.0 | 25-03-2026 | DESIGN | A | GOV1 | Enterprise Project Management Platform(EPMP) |

## Request Management
- Request Submission
- Evaluation

## Ideation
- Campaign Management
- Idea Submission & Evaluation

## Innovation
- Startup Innovation Programs

## Project Initiation
- Project ID Creation
- VCF Creation / Updation
- Program Definition

## Project Planning
- WBS (Gant) Creation

## Project Execution
- Resource Tagging
- Status Tracking
- Risk Management
- Change Management
- Dependency Management
- Action Management
- Decision Management

## Project Closure
- Project Document Upload
- Code Closure

## Vendor Management
- Vendor Evaluation

## Dashboards
- KPI Dashboards

## Resource Management
- Timesheet Management
- Resource Planning

| REVIEW REF NO. | EA REVIEW VERSION | DATE OF REVIEW | REVIEWER | EXCEPTION APPROVAL? | APPROVAL STATUS & REMARKS |
|---|---|---|---|---|---|
| <EA1234> | <1.0/1.1/etc> | (DD-MM-YYYY) | RAKESH K PANDEY | (YES/NO) | (APPROVED/REJECTED/PENDING FOR INFO.) |

## BUSINESS VALUES

EPMP

| PROJECT NAME | DEMAND NUMBER | BUSINESS DEPTT. | APPLICATION DEPTT. | BRD APPROVED? | PROJECT MANAGER | SOLUTION TYPE |
|---|---|---|---|---|---|---|
| Enterprise Project Management Platform(EPMP) | SCP25260824165280 | DE-GOV1 | DE-GOV1 | Yes | Aman Kumar Jha | NEW |
| **SOLUTION DESIGN DOCUMENT NAME** | **DOC VERSION** | **REQUEST DATE** | **REVIEW STAGE** | **TYPE CLASSIFICATION** | **APP. SUPPORT DEPTT.** | **APPLICATION NAME** |
| EPMP Solution Architecture | 1.0 | 25-03-2026 | DESIGN | A | GOV1 | Enterprise Project Management Platform(EPMP) |

Essential Project with the following set of qualitative values:

- Improved Governance & Transparency
- Faster Ideation-to-Execution Cycle
- Optimized Resource Utilization
- Enhanced Decision-Making Quality
- Scalability & Future Readiness
- Reduced Operational & Compliance Risk
- Leadership & Portfolio Visibility

ROI Indicators (Indicative):

- Reduction in manual effort for reporting and governance.
- Improved project success rate and schedule adherence.
- Early risk detection reducing downstream cost overruns.
- Faster innovation throughput converting ideas to value.

| REVIEW REF NO. | EA REVIEW VERSION | DATE OF REVIEW | REVIEWER | EXCEPTION APPROVAL? | APPROVAL STATUS & REMARKS |
|---|---|---|---|---|---|
| <EA1234> | <1.0/1.1/etc> | (DD-MM-YYYY) | RAKESH K PANDEY | (YES/NO) | (APPROVED/REJECTED/PENDING FOR INFO.) |

USER EXPERIENCE DESIGN

# EPMP

| PROJECT NAME | DEMAND NUMBER | BUSINESS DEPTT. | APPLICATION DEPTT. | BRD APPROVED? | PROJECT MANAGER | SOLUTION TYPE |
|---|---|---|---|---|---|---|
| Enterprise Project Management Platform(EPMP) | SCP25260824165280 | DE-GOV1 | DE-GOV1 | Yes | Aman Kumar Jha | NEW |
| **SOLUTION DESIGN DOCUMENT NAME** | **DOC VERSION** | **REQUEST DATE** | **REVIEW STAGE** | **TYPE CLASSIFICATION** | **APP. SUPPORT DEPTT.** | **APPLICATION NAME** |
| EPMP Solution Architecture | 1.0 | 25-03-2026 | DESIGN | A | GOV1 | Enterprise Project Management Platform(EPMP) |

## High Fidelity Screens

- Innovation
- Vendor Management
- IdeaHub
- Request Management
- Project Initiation
- Project Planning
- Action Management
- Dependency Management
- QA Management
- Risk Management
- Project Closure
- Change Management

## Low Fidelity Screens

EPMS_Low_Fi_Screens

1. **Section 1** : Global Swim Lane – Slide 2
2. **Section 2** : IdeaHub– Slide 3
3. **Section 3** : Innovation– Slide 34
4. **Section 4** : Legal– Slide 94
5. **Section 5** : Project Governance– Slide 100
6. **Section 6** : Program / Project Initiation– Slide 105
7. **Section 7** : Project Planning– Slide 121
8. **Section 8** : Action Management– Slide 151
9. **Section 9** : Dependency– Slide 156
10. **Section 10** : Decision Management– Slide 161
11. **Section 11** : Change Management – Slide 167
12. **Section 12**: Quality Management– Slide 174
13. **Section 13** : Risk Management – Slide 181
14. **Section 14**: Project Closure– Slide 193
15. **Section 15**: Time & Resource Management– Slide 203
16. **Section 16**: Vendor Management– Slide 210

| REVIEW REF NO. | EA REVIEW VERSION | DATE OF REVIEW | REVIEWER | EXCEPTION APPROVAL? | APPROVAL STATUS & REMARKS |
|---|---|---|---|---|---|
| <EA1234> | <1.0/1.1/etc> | (DD-MM-YYYY) | RAKESH K PANDEY | (YES/NO) | (APPROVED/REJECTED/PENDING FOR INFO.) |

# BUSINESS PROCESS DIAGRAM

EPMP

| PROJECT NAME | DEMAND NUMBER | BUSINESS DEPTT. | APPLICATION DEPTT. | BRD APPROVED? | PROJECT MANAGER | SOLUTION TYPE |
|---|---|---|---|---|---|---|
| Enterprise Project Management Platform(EPMP) | SCP25260824165280 | DE-GOV1 | DE-GOV1 | Yes | Aman Kumar Jha | NEW |
| **SOLUTION DESIGN DOCUMENT NAME** | **DOC VERSION** | **REQUEST DATE** | **REVIEW STAGE** | **TYPE CLASSIFICATION** | **APP. SUPPORT DEPTT.** | **APPLICATION NAME** |
| EPMP Solution Architecture | 1.0 | 25-03-2026 | DESIGN | A | GOV1 | Enterprise Project Management Platform(EPMP) |

Microsoft
werPoint Presentat

| REVIEW REF NO. | EA REVIEW VERSION | DATE OF REVIEW | REVIEWER | EXCEPTION APPROVAL? | APPROVAL STATUS & REMARKS |
|---|---|---|---|---|---|
| <EA1234> | <1.0/1.1/etc> | (DD-MM-YYYY) | RAKESH K PANDEY | (YES/NO) | (APPROVED/REJECTED/PENDING FOR INFO.) |

## INFORMATION ARCHITECTURE DIAGRAM

# EPMP

| PROJECT NAME | DEMAND NUMBER | BUSINESS DEPTT. | APPLICATION DEPTT. | BRD APPROVED? | PROJECT MANAGER | SOLUTION TYPE |
|---|---|---|---|---|---|---|
| Enterprise Project Management Platform(EPMP) | SCP25260824165280 | DE-GOV1 | DE-GOV1 | Yes | Aman Kumar Jha | NEW |
| **SOLUTION DESIGN DOCUMENT NAME** | **DOC VERSION** | **REQUEST DATE** | **REVIEW STAGE** | **TYPE CLASSIFICATION** | **APP. SUPPORT DEPTT.** | **APPLICATION NAME** |
| EPMP Solution Architecture | 1.0 | 25-03-2026 | DESIGN | A | GOV1 | Enterprise Project Management Platform(EPMP) |

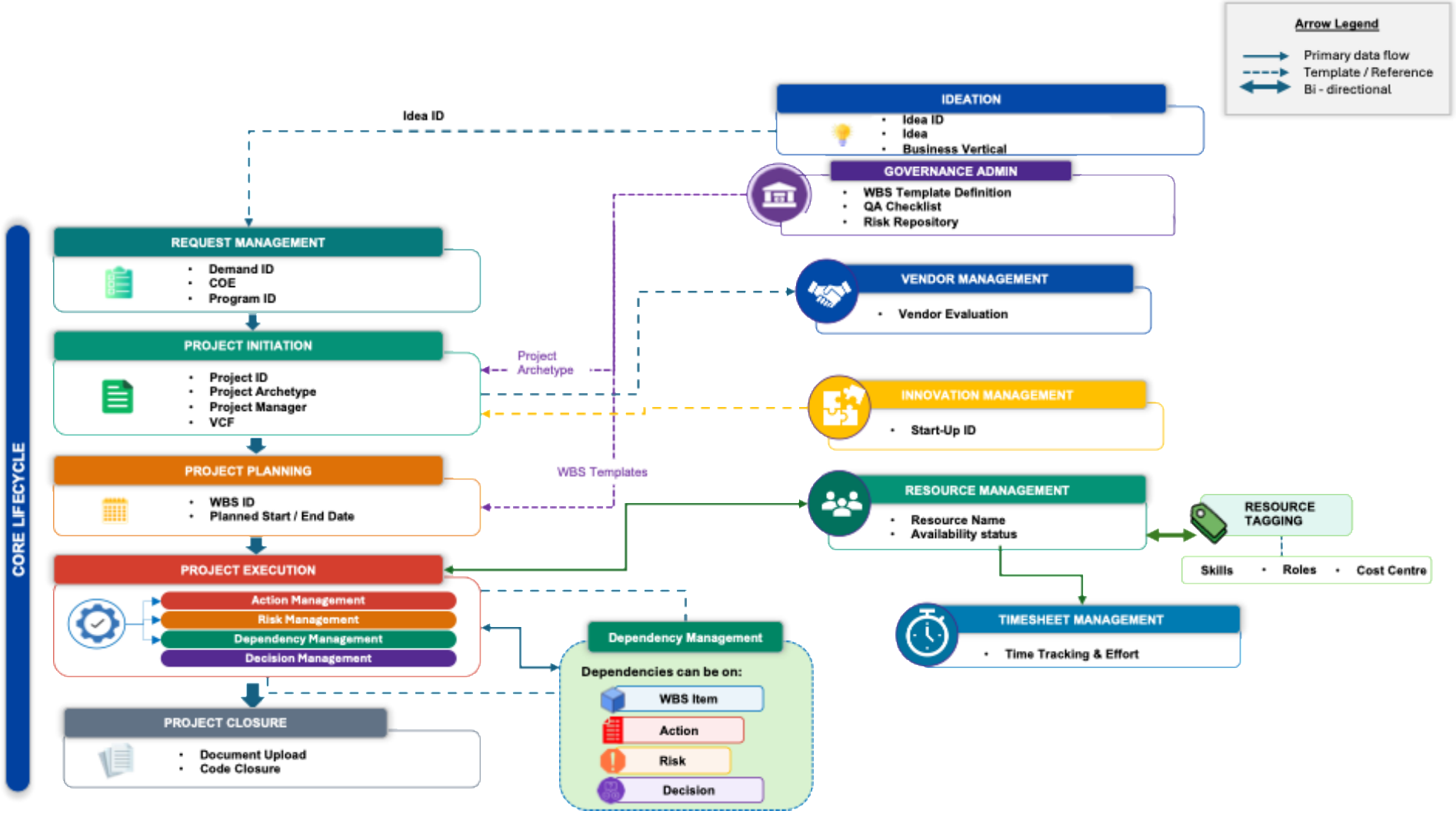


| REVIEW REF NO. | EA REVIEW VERSION | DATE OF REVIEW | REVIEWER | EXCEPTION APPROVAL? | APPROVAL STATUS & REMARKS |
|---|---|---|---|---|---|
| <EA1234> | <1.0/1.1/etc> | (DD-MM-YYYY) | RAKESH K PANDEY | (YES/NO) | (APPROVED/REJECTED/PENDING FOR INFO.) |

| PROJECT NAME | DEMAND NUMBER | BUSINESS DEPTT. | APPLICATION DEPTT. | BRD APPROVED? | PROJECT MANAGER | SOLUTION TYPE |
|---|---|---|---|---|---|---|
| Enterprise Project Management Platform(EPMP) | SCP25260824165280 | DE-GOV1 | DE-GOV1 | Yes | Aman Kumar Jha | NEW |
| **SOLUTION DESIGN DOCUMENT NAME** | **DOC VERSION** | **REQUEST DATE** | **REVIEW STAGE** | **TYPE CLASSIFICATION** | **APP. SUPPORT DEPTT.** | **APPLICATION NAME** |
| EPMP Solution Architecture | 1.0 | 25-03-2026 | DESIGN | A | GOV1 | Enterprise Project Management Platform(EPMP) |

# Integration Architecture

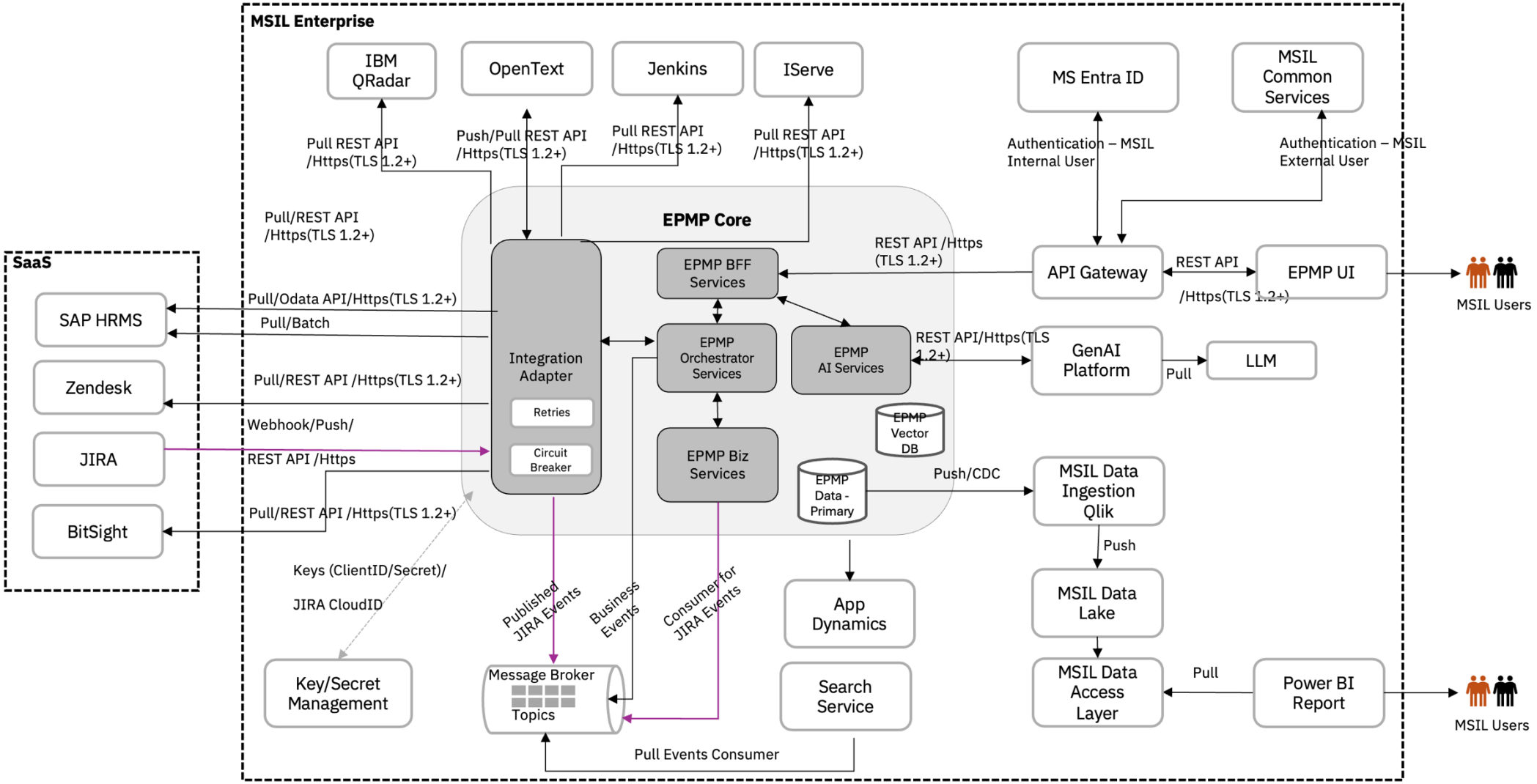


| REVIEW REF NO. | EA REVIEW VERSION | DATE OF REVIEW | REVIEWER | EXCEPTION APPROVAL? | APPROVAL STATUS & REMARKS |
|---|---|---|---|---|---|
| <EA1234> | <1.0/1.1/etc> | (DD-MM-YYYY) | RAKESH K PANDEY | (YES/NO) | (APPROVED/REJECTED/PENDING FOR INFO.) |

## APPLICATION ARCHITECTURE DIAGRAM

# EPMP

| PROJECT NAME | DEMAND NUMBER | BUSINESS DEPTT. | APPLICATION DEPTT. | BRD APPROVED? | PROJECT MANAGER | SOLUTION TYPE |
|---|---|---|---|---|---|---|
| Enterprise Project Management Platform(EPMP) | SCP25260824165280 | DE-GOV1 | DE-GOV1 | Yes | Aman Kumar Jha | NEW |
| **SOLUTION DESIGN DOCUMENT NAME** | **DOC VERSION** | **REQUEST DATE** | **REVIEW STAGE** | **TYPE CLASSIFICATION** | **APP. SUPPORT DEPTT.** | **APPLICATION NAME** |
| EPMP Solution Architecture | 1.0 | 25-03-2026 | DESIGN | A | GOV1 | Enterprise Project Management Platform(EPMP) |

# Technical Architecture

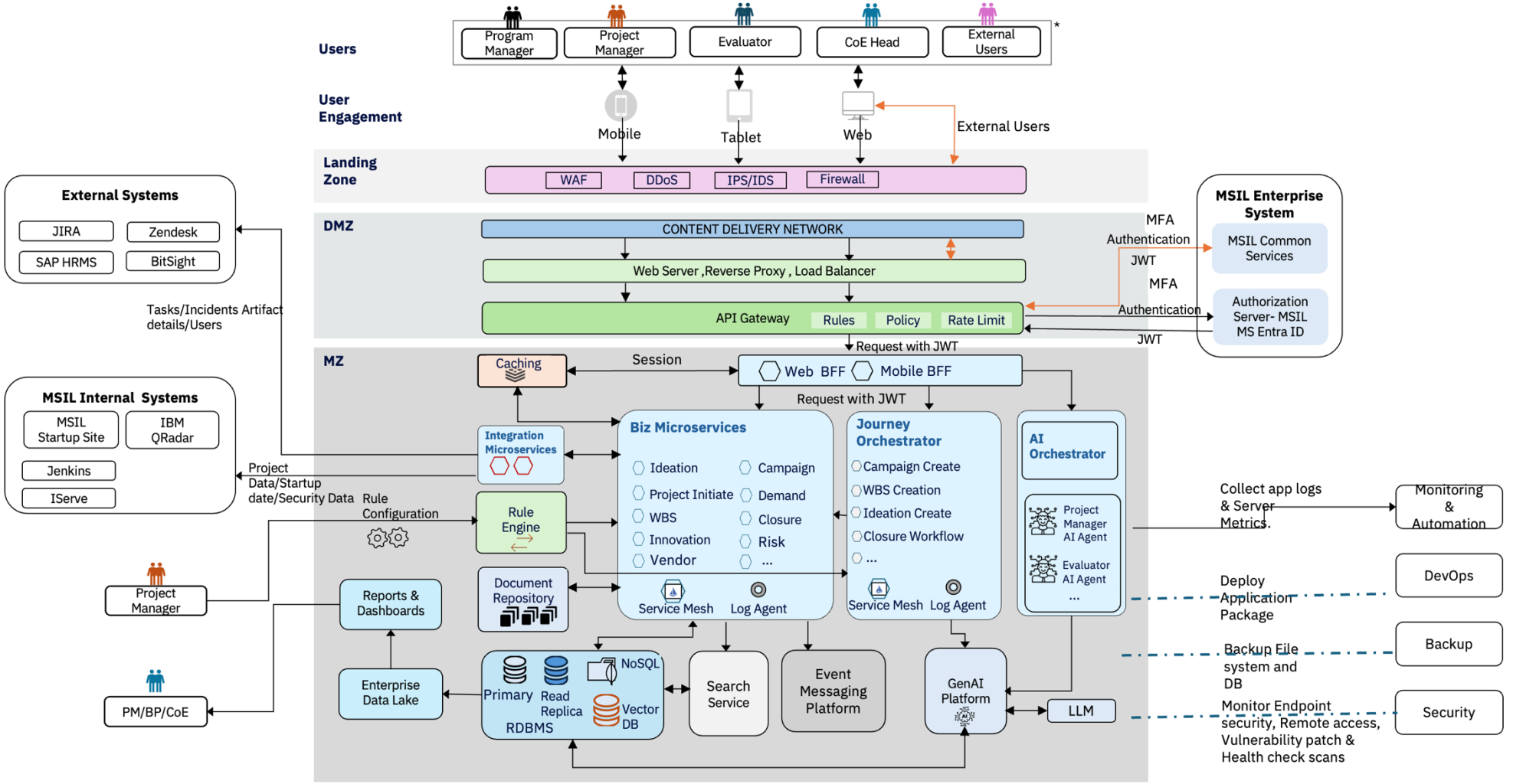


*Indicative Personas. Full list will be updated

| REVIEW REF NO. | EA REVIEW VERSION | DATE OF REVIEW | REVIEWER | EXCEPTION APPROVAL? | APPROVAL STATUS & REMARKS |
|---|---|---|---|---|---|
| <EA1234> | <1.0/1.1/etc> | (DD-MM-YYYY) | RAKESH K PANDEY | (YES/NO) | (APPROVED/REJECTED/PENDING FOR INFO.) |

| PROJECT NAME | DEMAND NUMBER | BUSINESS DEPTT. | APPLICATION DEPTT. | BRD APPROVED? | PROJECT MANAGER | SOLUTION TYPE |
|---|---|---|---|---|---|---|
| Enterprise Project Management Platform(EPMP) | SCP25260824165280 | DE-GOV1 | DE-GOV1 | Yes | Aman Kumar Jha | NEW |
| **SOLUTION DESIGN DOCUMENT NAME** | **DOC VERSION** | **REQUEST DATE** | **REVIEW STAGE** | **TYPE CLASSIFICATION** | **APP. SUPPORT DEPTT.** | **APPLICATION NAME** |
| EPMP Solution Architecture | 1.0 | 25-03-2026 | DESIGN | A | GOV1 | Enterprise Project Management Platform(EPMP) |

Component Descriptions

| Layer | Component | Technical Description |
|---|---|---|
| User Engagement | EPMP Mobile App | Mobile client delivering on-the-go access to approvals, task actions, status updates and alerts. Optimised for variable network conditions and simplified interaction patterns. |
| User Engagement | EPMP Web Portal | Primary browser-based application for dashboards, workflow actions, configuration, reporting and collaboration. Supports role-based UI composition and enterprise access controls. |
| Landing Zone | WAF (Web Application Firewall) | Protects EPMP web and API endpoints by inspecting HTTP/HTTPS requests and blocking malicious payloads such as SQL injection, XSS, and API abuse. Enforces rule-based filtering, rate limiting, and bot protection before traffic reaches the API Gateway. |
| Landing Zone | DDoS Protection | Safeguards EPMP availability by detecting and mitigating large-scale traffic floods (Layer 3/4/7 attacks). Automatically absorbs and filters volumetric attacks to ensure system uptime and consistent performance under abnormal traffic conditions. |
| Landing Zone | Firewall | Controls inbound and outbound network traffic using predefined security rules. Segregates EPMP environments (public, private, internal services) and restricts access to only trusted IP ranges, ports, and protocols, forming a foundational network security boundary. |
| Landing Zone | IDS/IPS | Monitors and analyzes network traffic for suspicious or malicious activity. IDS provides real-time detection and alerting, while IPS actively blocks or prevents identified threats. Enhances EPMP security through deep packet inspection and anomaly detection across internal and external traffic flows. |
| DMZ | Content Delivery Network | Edge distribution layer for static content, API acceleration and low-latency delivery. Also helps absorb traffic bursts and improves end-user response time. |
| DMZ | Reverse Proxy / Load Balancer Layer | Ingress layer that terminates TLS, balances traffic and forwards requests to APIs or BFF services. Supports high availability and routing controls. |
| DMZ | API Gateway | Single entry point for client and partner APIs, handling authentication, routing, throttling, request validation and observability. Enforces consistent API governance. Request handling rules such as header checks, schema validation, conditional routing and consumer-specific behaviour at the gateway edge. Security and governance policies including auth enforcement, CORS, request/response transformation and consumer access constraints. Rate Limiting controls request volumes to protect downstream services and ensure fair usage for channels and external consumers. |

| REVIEW REF NO. | EA REVIEW VERSION | DATE OF REVIEW | REVIEWER | EXCEPTION APPROVAL? | APPROVAL STATUS & REMARKS |
|---|---|---|---|---|---|
| <EA1234> | <1.0/1.1/etc> | (DD-MM-YYYY) | RAKESH K PANDEY | (YES/NO) | (APPROVED/REJECTED/PENDING FOR INFO.) |

| PROJECT NAME | DEMAND NUMBER | BUSINESS DEPTT. | APPLICATION DEPTT. | BRD APPROVED? | PROJECT MANAGER | SOLUTION TYPE |
|---|---|---|---|---|---|---|
| Enterprise Project Management Platform(EPMP) | SCP25260824165280 | DE-GOV1 | DE-GOV1 | Yes | Aman Kumar Jha | NEW |
| **SOLUTION DESIGN DOCUMENT NAME** | **DOC VERSION** | **REQUEST DATE** | **REVIEW STAGE** | **TYPE CLASSIFICATION** | **APP. SUPPORT DEPTT.** | **APPLICATION NAME** |
| EPMP Solution Architecture | 1.0 | 25-03-2026 | DESIGN | A | GOV1 | Enterprise Project Management Platform(EPMP) |

Component Descriptions

| Layer | Component | Technical Description |
|---|---|---|
| Identity | Authorization Server - MSIL Entra AD | Enterprise identity provider issuing tokens and managing SSO, group membership and access lifecycle for MSIL EPMP users. |
| Identity | Authorization Server – MSIL Common Services | Enterprise identity provider issuing tokens and managing SSO, group membership and access lifecycle for external users. |
| BFF | Web BFF | Client-specific backend that aggregates data for the web portal, reduces chatty calls and performs light response shaping for dashboards and screens. |
| BFF | Mobile BFF | Mobile-optimised backend exposing lean payloads, mobile-specific orchestration and channel-specific controls for latency and bandwidth efficiency. |
| Application | Biz Microservices | Core domain microservices implementing ideation, project initiation, WBS, execution, closure and related business capabilities. Own their business logic and service contracts. |
| Application | Journey Orchestrator | Coordinates long-running workflows such as campaign creation, WBS progression, approvals and closure using state management, retries and timeout handling. |
| Application | AI Orchestrator | Coordinates AI Agent workflows . |
| Application | Rule Engine | Executes configurable decision logic such as approval matrix, rules, validations and threshold-based policies. Should support admin-managed changes. |
| Application | Caching | In-memory cache for frequently accessed reference data, session-adjacent data, hot reads and derived responses to reduce latency and backend load. |
| Application | Integration Microservices | Anti-corruption services that isolate EPMP core from external systems through protocol conversion, mapping, retries and resilience controls. |

| REVIEW REF NO. | EA REVIEW VERSION | DATE OF REVIEW | REVIEWER | EXCEPTION APPROVAL? | APPROVAL STATUS & REMARKS |
|---|---|---|---|---|---|
| <EA1234> | <1.0/1.1/etc> | (DD-MM-YYYY) | RAKESH K PANDEY | (YES/NO) | (APPROVED/REJECTED/PENDING FOR INFO.) |

| PROJECT NAME | DEMAND NUMBER | BUSINESS DEPTT. | APPLICATION DEPTT. | BRD APPROVED? | PROJECT MANAGER | SOLUTION TYPE |
|---|---|---|---|---|---|---|
| Enterprise Project Management Platform(EPMP) | SCP25260824165280 | DE-GOV1 | DE-GOV1 | Yes | Aman Kumar Jha | NEW |
| **SOLUTION DESIGN DOCUMENT NAME** | **DOC VERSION** | **REQUEST DATE** | **REVIEW STAGE** | **TYPE CLASSIFICATION** | **APP. SUPPORT DEPTT.** | **APPLICATION NAME** |
| EPMP Solution Architecture | 1.0 | 25-03-2026 | DESIGN | A | GOV1 | Enterprise Project Management Platform(EPMP) |

Component Descriptions

| Layer | Component | Technical Description |
|---|---|---|
| Data / Analytics | BI Dashboard and Reporting | Provides MIS, KPI dashboards, portfolio reporting and executive decision-making. |
| Data / Analytics | Enterprise Data Platform | Separates analytical consumption from transactional workload. |
| Data / Content | Document Repository | Stores project artefacts, supporting documents, evidence and attachments with controlled access, metadata and retrieval support. ECM ( Opentext) will be used to store documents. ECM is deployed MISIL on premises and presently being authenticated with MSIL Entra ID. |
| Data | RDBMS | Relational system of record for structured transactional data such as projects, tasks, approvals, master data references and audit-linked entities. |
| Data | NoSQL | Schema-flexible store for high-volume metadata, activity streams, de-normalised views, session-like data or selective event-driven materialisations and logging data. |
| Data | Search Service | Indexing and query service enabling fast full-text search, faceting, filters and relevance-based retrieval across projects, WBS, documents and metadata. |
| Integration | Event Messaging Platform | Provides asynchronous communication backbone for system events, decoupled processing, notifications and integration triggers. |
| Gen AI | AI Orchestrator | Coordinates GenAI workflows by routing requests, invoking appropriate models/agents, and managing multi-step reasoning or tool execution. |
| Gen AI | Persona-Based Agents | Task-specific AI agents aligned to user roles (e.g., PM, CoE Head) that execute contextual actions, reasoning, and decision support within EPMS workflows. |
| Gen AI | LLM (Large Language Model) | Core AI model that processes natural language, generates responses, and performs reasoning based on prompts and contextual inputs. |
| Gen AI | Vector Database | Stores embeddings of EPMS data to enable semantic search, retrieval-augmented generation (RAG), and context-aware AI responses. |
| Gen AI | GenAI Platform | Provides foundational capabilities for model hosting, prompt management, guardrails, monitoring, and integration of AI services within EPMS. |

| REVIEW REF NO. | EA REVIEW VERSION | DATE OF REVIEW | REVIEWER | EXCEPTION APPROVAL? | APPROVAL STATUS & REMARKS |
|---|---|---|---|---|---|
| <EA1234> | <1.0/1.1/etc> | (DD-MM-YYYY) | RAKESH K PANDEY | (YES/NO) | (APPROVED/REJECTED/PENDING FOR INFO.) |

| PROJECT NAME | DEMAND NUMBER | BUSINESS DEPTT. | APPLICATION DEPTT. | BRD APPROVED? | PROJECT MANAGER | SOLUTION TYPE |
|---|---|---|---|---|---|---|
| Enterprise Project Management Platform(EPMP) | SCP25260824165280 | DE-GOV1 | DE-GOV1 | Yes | Aman Kumar Jha | NEW |
| **SOLUTION DESIGN DOCUMENT NAME** | **DOC VERSION** | **REQUEST DATE** | **REVIEW STAGE** | **TYPE CLASSIFICATION** | **APP. SUPPORT DEPTT.** | **APPLICATION NAME** |
| EPMP Solution Architecture | 1.0 | 25-03-2026 | DESIGN | A | GOV1 | Enterprise Project Management Platform(EPMP) |

Component Descriptions

| Layer | Component | Technical Description |
|---|---|---|
| Observability / Platform | Log Agent | Collects application and infrastructure logs, metrics and traces from services and runtime components for monitoring and troubleshooting. |
| Observability / Platform | Istio Service Mesh | Provides service-to-service traffic control, mTLS, observability and policy enforcement for microservice communication. |
| MSIL Internal Systems | Jenkins | Build and deployment automation tool that may exchange pipeline status, package metadata or automation triggers with EPMP platform. |
| MSIL Internal Systems | IBM QRadar | SIEM metrices to be integrated in EPMP dashboard. |
| MSIL Internal Systems | MSIL Startup Applications | Data entered by the startup entities to be integrated into EPMP Innovation process. |
| External Systems | TENSAI | GEN AI based value proposition platform , integration into EPMP. |
| External Systems | Iserve | KPI's for CISO approval data, to be integrated into EPMP dashboard. |
| External Systems | Zendesk | Customer/support platform that can provide ticketing data, issue references or support workflow integration into EPMP. |
| External Systems | Bitsight | Cybersecurity Risk Rating , to be integrated into EPMP dashboard |
| External Systems | SuccessFactors | HR platform used for employee, organisation, role or resource-related reference data in EPMP. |
| External Systems | JIRA | Third-party project, issue or development tracking platform integrated with EPMP for synchronisation of tickets or status. |

| REVIEW REF NO. | EA REVIEW VERSION | DATE OF REVIEW | REVIEWER | EXCEPTION APPROVAL? | APPROVAL STATUS & REMARKS |
|---|---|---|---|---|---|
| <EA1234> | <1.0/1.1/etc> | (DD-MM-YYYY) | RAKESH K PANDEY | (YES/NO) | (APPROVED/REJECTED/PENDING FOR INFO.) |

## TECHNICAL ARCHITECTURE DIAGRAM

# EPMP

| PROJECT NAME | DEMAND NUMBER | BUSINESS DEPTT. | APPLICATION DEPTT. | BRD APPROVED? | PROJECT MANAGER | SOLUTION TYPE |
|---|---|---|---|---|---|---|
| Enterprise Project Management Platform(EPMP) | SCP25260824165280 | DE-GOV1 | DE-GOV1 | Yes | Aman Kumar Jha | NEW |
| **SOLUTION DESIGN DOCUMENT NAME** | **DOC VERSION** | **REQUEST DATE** | **REVIEW STAGE** | **TYPE CLASSIFICATION** | **APP. SUPPORT DEPTT.** | **APPLICATION NAME** |
| EPMP Solution Architecture | 1.0 | 25-03-2026 | DESIGN | A | GOV1 | Enterprise Project Management Platform(EPMP) |

# Deployment Architecture on GCP

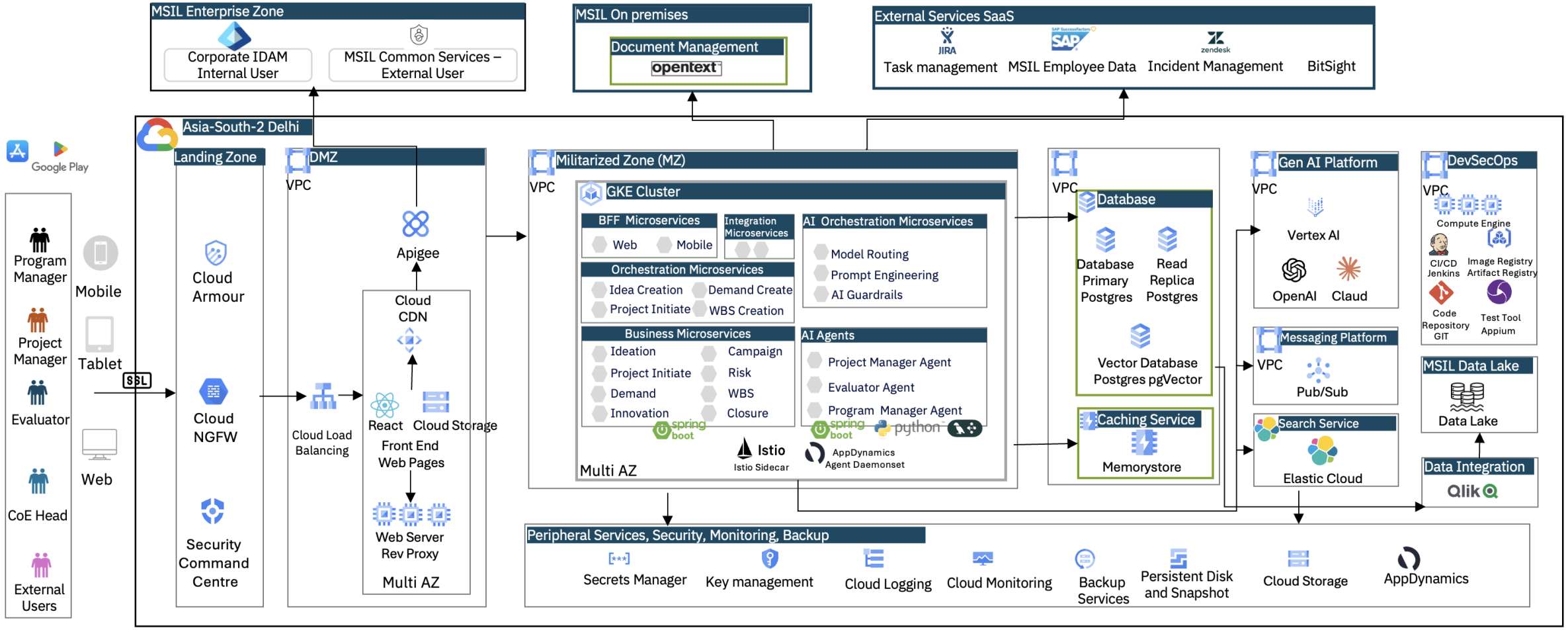


| REVIEW REF NO. | EA REVIEW VERSION | DATE OF REVIEW | REVIEWER | EXCEPTION APPROVAL? | APPROVAL STATUS & REMARKS |
|---|---|---|---|---|---|
| <EA1234> | <1.0/1.1/etc> | (DD-MM-YYYY) | RAKESH K PANDEY | (YES/NO) | (APPROVED/REJECTED/PENDING FOR INFO.) |

# SECURITY ARCHITECTURE DIAGRAM

## EPMP

| PROJECT NAME | DEMAND NUMBER | BUSINESS DEPTT. | APPLICATION DEPTT. | BRD APPROVED? | PROJECT MANAGER | SOLUTION TYPE |
|---|---|---|---|---|---|---|
| Enterprise Project Management Platform(EPMP) | SCP25260824165280 | DE-GOV1 | DE-GOV1 | Yes | Aman Kumar Jha | NEW |
| **SOLUTION DESIGN DOCUMENT NAME** | **DOC VERSION** | **REQUEST DATE** | **REVIEW STAGE** | **TYPE CLASSIFICATION** | **APP. SUPPORT DEPTT.** | **APPLICATION NAME** |
| EPMP Solution Architecture | 1.0 | 25-03-2026 | DESIGN | A | GOV1 | Enterprise Project Management Platform(EPMP) |

# Security Architecture

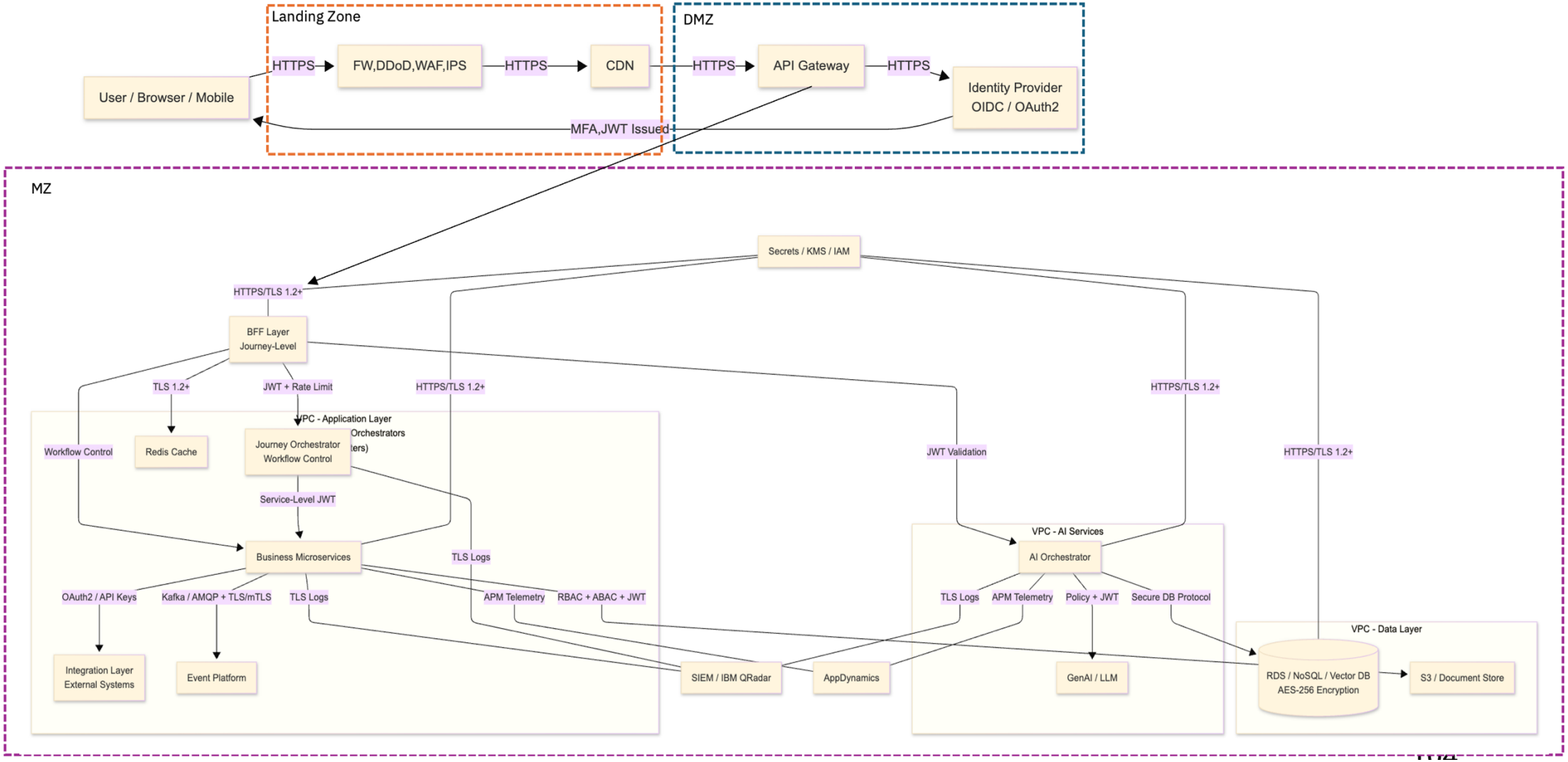


| REVIEW REF NO. | EA REVIEW VERSION | DATE OF REVIEW | REVIEWER | EXCEPTION APPROVAL? | APPROVAL STATUS & REMARKS |
|---|---|---|---|---|---|
| <EA1234> | <1.0/1.1/etc> | (DD-MM-YYYY) | RAKESH K PANDEY | (YES/NO) | (APPROVED/REJECTED/PENDING FOR INFO.) |

| PROJECT NAME | DEMAND NUMBER | BUSINESS DEPTT. | APPLICATION DEPTT. | BRD APPROVED? | PROJECT MANAGER | SOLUTION TYPE |
|---|---|---|---|---|---|---|
| Enterprise Project Management Platform(EPMP) | SCP25260824165280 | DE-GOV1 | DE-GOV1 | Yes | Aman Kumar Jha | NEW |
| **SOLUTION DESIGN DOCUMENT NAME** | **DOC VERSION** | **REQUEST DATE** | **REVIEW STAGE** | **TYPE CLASSIFICATION** | **APP. SUPPORT DEPTT.** | **APPLICATION NAME** |
| EPMP Solution Architecture | 1.0 | 25-03-2026 | DESIGN | A | GOV1 | Enterprise Project Management Platform(EPMP) |

Security Architecture Details

| Source Component | Target Component | Communication Purpose | Protocol / Communication Type | Security Mechanism | Authentication / Authorization | Remarks |
|---|---|---|---|---|---|---|
| User Browser / Mobile App | CDN | Access static content, web assets | HTTPS | TLS 1.2+ / 1.3 | Public access or token-aware access as applicable | CDN should enforce HTTPS only |
| User Browser / Mobile App | Reverse Proxy / Load Balancer | Entry point for UI/API traffic | HTTPS | TLS 1.2+ / 1.3 | Token forwarding / session propagation/MFA | SSL termination can happen at LB or gateway as per design |
| External User | Web Portal | Access EPMS over internet | HTTPS | TLS 1.2+ / 1.3, WAF rules, DDoS protection | JWT / SSO via Azure AD/MFA | External user access should be restricted via policy and role checks |
| Reverse Proxy / Load Balancer | API Gateway | Route application/API requests | HTTPS | TLS 1.2+ / 1.3 | Mutual trust within controlled zone, optional mTLS | Prefer encrypted internal hop also |
| API Gateway | Azure AD / Authorization Server | Authentication and token validation | HTTPS/REST | TLS 1.2+ / 1.3 | OAuth 2.0 / OpenID Connect / JWT validation | Gateway validates issuer, audience, expiry, signature |
| API Gateway | MSIL Common Services | Enterprise service access | HTTPS / REST | TLS 1.2+ / 1.3 | Service account / OAuth2 / JWT | Depends on common service contract |
| API Gateway | Web BFF / Mobile BFF | Forward authenticated API requests | HTTPS / REST | TLS 1.2+ / 1.3 | JWT propagation | Gateway should pass validated user claims |
| Web BFF / Mobile BFF | Caching Layer | Session/context/cache lookup | TLS-enabled Redis protocol | TLS, network isolation | Auth token / Redis auth / IAM as applicable | Do not keep sensitive business data in plain cache |
| Web BFF / Mobile BFF | Biz Microservices | Business API calls | HTTPS / REST | TLS, preferably mTLS in service mesh environments | JWT propagation, service authorization | User claims may be forwarded for downstream authorization |
| Web BFF / Mobile BFF | Journey Orchestrator | Initiate business workflows | HTTPS / REST | TLS, preferably mTLS | JWT + service authorization | Orchestrator should revalidate permissions for workflow actions |
| Web BFF / Mobile BFF | AI Orchestrator | Invoke AI-enabled features | HTTPS / REST | TLS 1.2+ / 1.3 | JWT + policy-based authorization | Sensitive prompts and outputs should be audited |
| Biz Microservices | Biz Microservices | Inter-service domain communication | REST | mTLS via service mesh | Service identity + JWT/pass-through claims where needed | Recommended to use Istio/App Mesh mTLS |
| Biz Microservices | Journey Orchestrator | Workflow coordination | REST / event call | mTLS or TLS 1.2+ | Service-to-service auth | Long-running processes should use signed and traceable requests |
| Biz Microservices | Integration Microservices | External system invocation | REST / async trigger | TLS / mTLS | Service authentication | Adapter acts as anti-corruption and isolation layer |
| Biz Microservices | Document Repository | Store/retrieve documents | HTTPS / API / SDK | TLS 1.2+ / 1.3 | Service auth / IAM / signed URL / access token | Documents should be encrypted at rest |
| Biz Microservices | RDBMS | Transactional data persistence | Secure DB protocol | TLS 1.2+ / 1.3 | DB user / IAM auth / secret-managed creds | Restrict direct DB access to service accounts only |
| Biz Microservices | NoSQL / Vector DB | Metadata / AI / flexible data access | Secure DB protocol | TLS 1.2+ / 1.3 | Service account / IAM / DB creds | Apply network segmentation and scoped permissions |

| REVIEW REF NO. | EA REVIEW VERSION | DATE OF REVIEW | REVIEWER | EXCEPTION APPROVAL? | APPROVAL STATUS & REMARKS |
|---|---|---|---|---|---|
| <EA1234> | <1.0/1.1/etc> | (DD-MM-YYYY) | RAKESH K PANDEY | (YES/NO) | (APPROVED/REJECTED/PENDING FOR INFO.) |

| PROJECT NAME | DEMAND NUMBER | BUSINESS DEPTT. | APPLICATION DEPTT. | BRD APPROVED? | PROJECT MANAGER | SOLUTION TYPE |
|---|---|---|---|---|---|---|
| Enterprise Project Management Platform(EPMP) | SCP25260824165280 | DE-GOV1 | DE-GOV1 | Yes | Aman Kumar Jha | NEW |
| **SOLUTION DESIGN DOCUMENT NAME** | **DOC VERSION** | **REQUEST DATE** | **REVIEW STAGE** | **TYPE CLASSIFICATION** | **APP. SUPPORT DEPTT.** | **APPLICATION NAME** |
| EPMP Solution Architecture | 1.0 | 25-03-2026 | DESIGN | A | GOV1 | Enterprise Project Management Platform(EPMP) |

Security Architecture Details

| Source Component | Target Component | Communication Purpose | Protocol / Communication Type | Security Mechanism | Authentication / Authorization | Remarks |
|---|---|---|---|---|---|---|
| Biz Microservices | Rule Engine | Rule evaluation / decision lookup | REST | TLS 1.2+ / mTLS | Service authentication | Rule changes should be admin-controlled and audited |
| Biz Microservices | Event Messaging Platform | Publish domain events | AMQP / Kafka | TLS, preferably mTLS if supported | Producer auth via cert / IAM / SASL | Events should carry minimal sensitive data |
| Biz Microservices / Orchestrator / AI Orchestrator | Log Agent / Monitoring | Send logs, traces, metrics | Agent protocol | TLS 1.2+ / 1.3 | Agent/service identity | Avoid logging secrets, tokens, or PII |
| Journey Orchestrator | Event Messaging Platform | Publish workflow events | AMQP / Kafka | TLS 1.2+ / 1.3 | Producer identity / IAM | Workflow audit events recommended |
| Integration Microservices | Event Messaging Platform | Publish integration events | AMQP / Kafka | TLS 1.2+ / 1.3 | Producer auth | Good for decoupled webhook processing |
| Integration Microservices | External Systems (JIRA, Zendesk, SAP SuccessFactors, Jenkins) | System-to-system integration | HTTPS / REST / Webhook / Odata API | TLS 1.2+ / 1.3 | OAuth2, API key, Basic Auth, signed webhook, service credentials | Auth model depends on external system |
| GenAI Platform | LLM | Model inference call | HTTPS / API | TLS 1.2+ / 1.3 | Platform-managed credentials / IAM | Prefer private endpoint if available |
| AI Orchestrator | GenAI Platform | Prompt/response invocation | HTTPS / API | TLS 1.2+ / 1.3 | API key / IAM / OAuth depending on platform | Apply prompt guardrails and response filtering |
| AI Orchestrator | Vector DB | Semantic retrieval | Secure DB Protocol / API | TLS 1.2+ / 1.3 | Service auth | Retrieval scope should respect user authorization |
| Reports & Dashboards | Enterprise Data Lake | Reporting / analytics access | HTTPS / API | TLS 1.2+ / 1.3 | IAM / service role / RBAC | BI access should be role-restricted |
| Project Manager / Admin UI | Rule Engine | Rule configuration | HTTPS | TLS 1.2+ / 1.3 | RBAC, admin privileges | High-risk operation; must be audited |
| Search Service | RDBMS / NoSQL / Vector DB | Read indexed source data | Secure DB / API | TLS 1.2+ / 1.3 | Service account | Prefer controlled ingestion path over broad DB access |
| Platform / Monitoring | Incident Management Tool | Raise alerts / incidents | HTTPS / API | TLS 1.2+ / 1.3 | API token / service account | For Sev1/Sev2 operational alerts |
| Backup Systems | Databases / File Systems | Backup and restore | Secure backup protocol | TLS 1.2+ + encryption at rest | Backup service identity | Backup copies must also be encrypted |
| DevOps / CI-CD | Runtime Platform / EKS / Services | Deployment / rollout | HTTPS / kubectl / pipeline integration | TLS 1.2+ / 1.3 | IAM role / service account / signed artifacts | Enforce signed builds and least privilege |
| Security Tools | Endpoints / Workloads | Vulnerability scan / compliance check | Secure agent/API | TLS 1.2+ / 1.3 | Managed service identity | Findings should feed central monitoring |

| REVIEW REF NO. | EA REVIEW VERSION | DATE OF REVIEW | REVIEWER | EXCEPTION APPROVAL? | APPROVAL STATUS & REMARKS |
|---|---|---|---|---|---|
| <EA1234> | <1.0/1.1/etc> | (DD-MM-YYYY) | RAKESH K PANDEY | (YES/NO) | (APPROVED/REJECTED/PENDING FOR INFO.) |

## NON-FUNCTIONAL REQUIREMENTS

EPMP

| PROJECT NAME | DEMAND NUMBER | BUSINESS DEPTT. | APPLICATION DEPTT. | BRD APPROVED? | PROJECT MANAGER | SOLUTION TYPE |
|---|---|---|---|---|---|---|
| Enterprise Project Management Platform(EPMP) | SCP25260824165280 | DE-GOV1 | DE-GOV1 | Yes | Aman Kumar Jha | NEW |
| **SOLUTION DESIGN DOCUMENT NAME** | **DOC VERSION** | **REQUEST DATE** | **REVIEW STAGE** | **TYPE CLASSIFICATION** | **APP. SUPPORT DEPTT.** | **APPLICATION NAME** |
| EPMP Solution Architecture | 1.0 | 25-03-2026 | DESIGN | A | GOV1 | Enterprise Project Management Platform(EPMP) |

| Category | Non-functional requirement | Requirements | Specifications | | | |
|---|---|---|---|---|---|---|
| **System Load** | | | **Current** | **Future in 1 year** | **In 2 years** | **In 3 years** |
| | Total number of users of the system | | 30,000 | | | |
| | Number of concurrent users at peak time | | 3,000 | | | |
| | Number of concurrent users (average) | | 1,800 | | | |
| **Response Time** | Target & Maximum Response Time (seconds) for different categories (add categories as per project need) | | | | | |
| | Landing page / Main Screen | | <500 ms | | | |
| | Normal pages | | <500 ms | | | |
| | Dashboard/heavy processing page | | 1 sec | | | |
| | Reports | | 1 sec | | | |
| | Threshold for service API (for non UI applications) | | <=1 Sec | | | |
| | Target acceptance criteria like response time on 95 percentile of requests | | <=2 Sec | | | |
| | Background task completion | | <=30 Sec | | | |
| | Asynchronous notifications | | <=5 Sec | | | |
| **Performance & Integration** | Availability & Reliability | | | | | |
| | Business-as-usual uptime SLA (e.g., 99.9% / 99.95%) | | 99.90% | 99.90% | 99.90% | 99.90% |
| | Planned vs unplanned downtime | Planned- max 1 hour/month<br>unplanned- <=0.1% monthly downtime | | | | |
| | Active-active / active-passive setup | TBD | | | | |
| | Observability & Monitoring | Required | | | | |
| | Application metrics (CPU, memory, latency) | Server CPU, Memory, Latency. | | | | |
| | Centralized logging- Operational logs | Yes | | | | |
| | Alerting & escalation | Yes | | | | |
| | Dashboard availability (Grafana/App Insights/etc.) | App Dynamics , API monitoring | | | | |
| | API versioning | Required | | | | |
| | External dependency SLAs | <1.5 sec for SaaS based API response time | | | | |
| | Retry & timeout policies | 3 retries and | | | | |
| | DevOps & Release Management | Required | | | | |
| | Zero-downtime deployment | Yes | | | | |
| | Rollback strategy | Yes | | | | |

| REVIEW REF NO. | EA REVIEW VERSION | DATE OF REVIEW | REVIEWER | EXCEPTION APPROVAL? | APPROVAL STATUS & REMARKS |
|---|---|---|---|---|---|
| <EA1234> | <1.0/1.1/etc> | (DD-MM-YYYY) | RAKESH K PANDEY | (YES/NO) | (APPROVED/REJECTED/PENDING FOR INFO.) |

| PROJECT NAME | DEMAND NUMBER | BUSINESS DEPTT. | APPLICATION DEPTT. | BRD APPROVED? | PROJECT MANAGER | SOLUTION TYPE |
|---|---|---|---|---|---|---|
| Enterprise Project Management Platform(EPMP) | SCP25260824165280 | DE-GOV1 | DE-GOV1 | Yes | Aman Kumar Jha | NEW |
| **SOLUTION DESIGN DOCUMENT NAME** | **DOC VERSION** | **REQUEST DATE** | **REVIEW STAGE** | **TYPE CLASSIFICATION** | **APP. SUPPORT DEPTT.** | **APPLICATION NAME** |
| EPMP Solution Architecture | 1.0 | 25-03-2026 | DESIGN | A | GOV1 | Enterprise Project Management Platform(EPMP) |

| Category | Non-functional requirement | Requirements | Specifications | | | | Category | Non-functional requirement |
|---|---|---|---|---|---|---|---|---|
| **Security** | Database encryption needed specify the tables, fields etc. | Encrypted at Rest and Transit | | | | | | |
| | Anonymize PII in backups & analytics datasets | yes | | | | | | |
| | Encryption mechanism to be used in Application | Specify | | | | | | |
| | Communication between App, DB or other internal server needs to be controlled? | yes | | | | | | |
| | Communication with external systems needs to be controlled? | yes | | | | | | |
| | Communication protocol for external system integration | REST | | | | | | |
| | Authentication mechanism for external system integration | OAuth2 | | | | | | |
| | SSL required for external APIs? | Yes | | | | | | |
| | User is not allowed to access any url directly without login | Yes | | | | | | |
| | Security threats like SQL injection | Yes | | | | | | |
| | Security acceptance criteria like HCL AppScan | | | | | | | |
| | Role-based access control (RBAC) | Yes | | | | | | |
| | Maker–checker approval workflows | Yes | | | | | | |
| | IP whitelisting enabled | Yes | | | | | | |
| | HMAC signing for internal APIs | Yes | | | | | | |
| | MTLS for high-security endpoints | Yes | | | | | | |
| | Data masking in non-prod environments | Yes | | | | | | |
| | Session timeout & idle logout | 5 min | | | | | | |
| | Secure key management (HSM / Vault) | | | | | | | |
| **Token Expiry & Session limits** | JWT Expiry : 15 min | | | | | | | |
| | Idle timeout : 5 min | | | | | | | |
| | Absolute timeout : 8 hours | | | | | | | |

| REVIEW REF NO. | EA REVIEW VERSION | DATE OF REVIEW | REVIEWER | EXCEPTION APPROVAL? | APPROVAL STATUS & REMARKS |
|---|---|---|---|---|---|
| <EA1234> | <1.0/1.1/etc> | (DD-MM-YYYY) | RAKESH K PANDEY | (YES/NO) | (APPROVED/REJECTED/PENDING FOR INFO.) |

| PROJECT NAME | DEMAND NUMBER | BUSINESS DEPTT. | APPLICATION DEPTT. | BRD APPROVED? | PROJECT MANAGER | SOLUTION TYPE |
|---|---|---|---|---|---|---|
| Enterprise Project Management Platform(EPMP) | SCP25260824165280 | DE-GOV1 | DE-GOV1 | Yes | Aman Kumar Jha | NEW |
| **SOLUTION DESIGN DOCUMENT NAME** | **DOC VERSION** | **REQUEST DATE** | **REVIEW STAGE** | **TYPE CLASSIFICATION** | **APP. SUPPORT DEPTT.** | **APPLICATION NAME** |
| EPMP Solution Architecture | 1.0 | 25-03-2026 | DESIGN | A | GOV1 | Enterprise Project Management Platform(EPMP) |

| Category | Non-functional requirement | Requirements | Specifications | | | |
|---|---|---|---|---|---|---|
| **Audit and Edit trail** | | | | | | |
| | Audited elements- What business elements will be audited? | User master, role & access configurations, Customer id, transactions, approval workflow, configuration changes, reference data, policy/rule configuration | | | | |
| | Audited fields- What data fields will be audited? | Action type (create/update/delete etc), Fields name, old/new value, timestamp, roles, approval status, access, PII fields etc | | | | |
| | Audit file characteristics (Audit & compliance logs)- Timestamp, user id, role | User ID, Timestamp | | | | |
| | Approval logs (who approved what, when) | Yes | | | | |
| | Elements- What elements history needs to be maintained | Version history, records to be retrieved, system must support comparison between versions | | | | |
| | Audit Monitoring & Compliance Reporting | Yes | | | | |
| **Recovery and Backup** | | | | | | |
| | Custom Recovery process needed? | Yes | | | | |
| | Disaster scenarios recovery timescales- How quickly does recovery takes to perform/ down time acceptable | RPO and RTO need to be specified in hours. RPO refers to the maximum duration of data loss that can be tolerated. RTO refers to the time required to resume operations after a disaster, typically from the Disaster Recovery (DR) site. | | RPO = 15 minutes RTO = 1 hour | | |
| | Backup frequency for disaster recovery - How often is backup taken for | Once a day or twice a day. | | | | |
| | - Database (like Weekly full and Daily/ hourly transactional) | Daily full + hourly log backups | | | | |
| | - Folders and files | Daily | | | | |
| | - Set-up data | Once a day or twice a day. | | | | |
| | - System state | Daily | | | | |
| | - Code | On every release | | | | |
| | Database purging / archival policy | Years or months. | | | | |

| REVIEW REF NO. | EA REVIEW VERSION | DATE OF REVIEW | REVIEWER | EXCEPTION APPROVAL? | APPROVAL STATUS & REMARKS |
|---|---|---|---|---|---|
| <EA1234> | <1.0/1.1/etc> | (DD-MM-YYYY) | RAKESH K PANDEY | (YES/NO) | (APPROVED/REJECTED/PENDING FOR INFO.) |

| PROJECT NAME | DEMAND NUMBER | BUSINESS DEPTT. | APPLICATION DEPTT. | BRD APPROVED? | PROJECT MANAGER | SOLUTION TYPE |
|---|---|---|---|---|---|---|
| Enterprise Project Management Platform(EPMP) | SCP25260824165280 | DE-GOV1 | DE-GOV1 | Yes | Aman Kumar Jha | NEW |
| **SOLUTION DESIGN DOCUMENT NAME** | **DOC VERSION** | **REQUEST DATE** | **REVIEW STAGE** | **TYPE CLASSIFICATION** | **APP. SUPPORT DEPTT.** | **APPLICATION NAME** |
| EPMP Solution Architecture | 1.0 | 25-03-2026 | DESIGN | A | GOV1 | Enterprise Project Management Platform(EPMP) |

| Category | Non-functional requirement | Category | Current | Future in 1 year | In 2 years | In 3 years |
|---|---|---|---|---|---|---|
| **Regulatory Compliance** | Financial regulations (based on geography): SEBI (India), SEC / FINRA (US), GDPR / DPDP Act? | Yes | | | | |
| | Data retention & archival rules | Yes | | | | |
| | Audit log retention period | Years or months. TBD | | | | |
| **Document Management** | Maximum number of documents per month | | 500 | 550 | 600 | 650 |
| | Average size of each document | | 1-5 MB | 1-5 MB | 1-5 MB | 1-5 MB |
| **User Experience** | Chrome (latest + last 2 versions) | Yes | | | | |
| | Microsoft Edge (Chromium, latest + last 2) | Yes | | | | |
| | Safari (macOS & iOS – last 2 versions) | Yes | | | | |
| | Desktop | Yes | | | | |
| | Tablet | Yes | | | | |
| | Mobile | Yes | | | | |
| | Orientation support (portrait/landscape) | Yes | | | | |
| | Internationalization and localization (application level / code level / log level) | No | | | | |
| | Languages supported | English | | | | |
| | Date time display | Yes | | | | |
| | Currency | All | | | | |
| | Time-zone handling | All | | | | |
| | Accessibility requirements | No | | | | |
| | Text to speech | Yes | | | | |
| | Speech to text | Yes | | | | |
| | WCAG 2.1 AA compliance | Yes | | | | |

| REVIEW REF NO. | EA REVIEW VERSION | DATE OF REVIEW | REVIEWER | EXCEPTION APPROVAL? | APPROVAL STATUS & REMARKS |
|---|---|---|---|---|---|
| <EA1234> | <1.0/1.1/etc> | (DD-MM-YYYY) | RAKESH K PANDEY | (YES/NO) | (APPROVED/REJECTED/PENDING FOR INFO.) |

| PROJECT NAME | DEMAND NUMBER | BUSINESS DEPTT. | APPLICATION DEPTT. | BRD APPROVED? | PROJECT MANAGER | SOLUTION TYPE |
|---|---|---|---|---|---|---|
| Enterprise Project Management Platform(EPMP) | SCP25260824165280 | DE-GOV1 | DE-GOV1 | Yes | Aman Kumar Jha | NEW |
| **SOLUTION DESIGN DOCUMENT NAME** | **DOC VERSION** | **REQUEST DATE** | **REVIEW STAGE** | **TYPE CLASSIFICATION** | **APP. SUPPORT DEPTT.** | **APPLICATION NAME** |
| EPMP Solution Architecture | 1.0 | 25-03-2026 | DESIGN | A | GOV1 | Enterprise Project Management Platform(EPMP) |

| Category | Non-functional requirement | Category | Current | Future in 1 year | In 2 years | In 3 years | Category | Non-functional requirement |
|---|---|---|---|---|---|---|---|---|
| **Performance & System Load** | System must handle 2x peak load for 30 min | | | | | | | |
| | System must handle 3x burst load for 5 min without failure | | | | | | | |
| | Auto-scaling must instantly respond to burst traffic | | | | | | | |
| | Batch processing window | | | | | | | |
| | End- of -day batch must finish within 45 minutes | | | | | | | |
| | End-of-month batch must finish within 4 hours | | | | | | | |
| | Queue Backlog tolerance | | | | | | | |
| | Queue backlog tolerance= max 5000 messages | | | | | | | |
| | System must auto-scale consumers when backlog>1000 messages | | | | | | | |
| | API Rate limits/ Throttling specs | | | | | | | |
| | Rate limit= 300 requests/min per user, 1000 requests/min per client app | | | | | | | |
| | On throttling: return HTTP 429 + Retry-After header | | | | | | | |
| | Client must backoff and retry | | | | | | | |
| **UX- Messaging Standards** | Error messages must not expose stack trace, DB info | | | | | | | |
| **Graceful Degradation** | Use cached data for 10 min | | | | | | | |
| | Make portal raed-only | | | | | | | |
| | Disable non-critical features | | | | | | | |
| **Virus Scanning** | All uploads scanned with anti-malware | | | | | | | |
| | Allowed file types restricted | | | | | | | |
| **Retention Duration** | KYC: 10 years | | | | | | | |
| | Contracts: 7 years | | | | | | | |
| | Logs (System/application) : 1 years, Security Logs : 3 years, Audit Logs : 7 years | | | | | | | |
| | | | | | | | | |

| REVIEW REF NO. | EA REVIEW VERSION | DATE OF REVIEW | REVIEWER | EXCEPTION APPROVAL? | APPROVAL STATUS & REMARKS |
|---|---|---|---|---|---|
| <EA1234> | <1.0/1.1/etc> | (DD-MM-YYYY) | RAKESH K PANDEY | (YES/NO) | (APPROVED/REJECTED/PENDING FOR INFO.) |